STRAIGHT SHAPE BALL JOINT ROD ENDS

Ball joint housing is an axial shank with a female thread,it's made up of zinc base alloy,they are available for right or left-hand female thread.

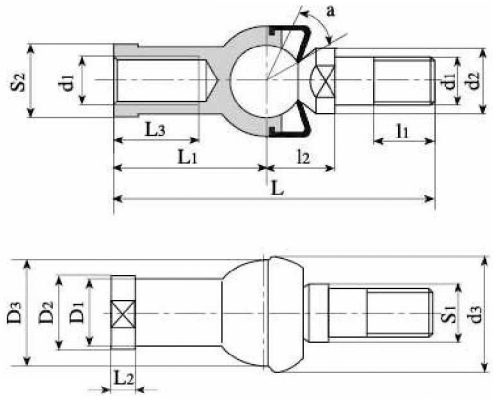

Sliding contact surfaces:steel/Zinc base alloy

轴承型号 Bearing number	尺寸 Dimensions mm															载荷 ratings (kN)	重量 Weight kg
	d_1	d_2	d_3	l_1	l_2	S_1	L	L_1	L_2	L_3	D_1	D_2	D_3	S_2	$\approx a^\circ$		
SQZ5-RS	M5	9	19	8	11	7	46	24	4	12	9	11	17	9	15	2.8	0.025
SQZ6-RS	M6	10	20	11	12.2	8	55.2	28	5	15	10	13	20	11	15	3.7	0.041
SQZ8-RS	M8	12	24	12	16	10	65	32	5	16	12.5	16	24	14	15	5.8	0.075
SQZ10-RS	M10*1.25	14	30	15	19.5	11	74.5	35	6.5	18	15	19	28	17	15	8.4	0.12
SQZ12-RS	M12*1.25	17	32	17	21	15	84	40	6.5	20	17.5	22	32	19	15	11	0.18
SQZ14-RS	M14*1.5	19	38	22	23.5	17	103	45	8	25	20	25	36	22	11	15	0.27
SQZ16-RS	M16*1.5	22	44	23	25.5	19	112	50	8	27	22	27	40	22	11	15	0.36
SQZ18-RS	M18*1.5	23	45	25	31	20	130.5	58	10	32	25	31	45	27	11	19	0.54
SQZ20-RS	M20*1.5	27	50	25	29	24	133	63	10	38	27.5	34	45	30	7.5	19	0.57
SQZ22-RS	M22*1.5	27	52	26	33	24	145	70	12	43	30	37	50	32	7.5	23	0.76